SPECIFICATION SHEET FOR NEW YORK APPROVED DIE CASTING LED EXIT SIGN

MED-800 Series

Je Woo Corporation,Ltd.
Dong Sheng Industrial Park, Dong Sheng Village, Chen Jiang Subdistrict office, Zhong Kai High-Tech Development Zone, Hui Zhou City, Guang Dong, P.R.C.
Tel：86-752-312-5585
Fax：86-752-312-5586 / 5587

Table Of Content

Revision History ---------- 1
Product Photo ---------- 2
Product Dimension---------- 2
Product Feature---------- 2
Order Guide-------- ---------- 2
Model List and Parameter ---------- 3
Photometric ---------- 4
Packaging ---------- 5

Revision History

Revised Symbol	Revised Description	Version	Revised By	Revised Date
	New create	E.0	Jani	2016.8.18

Product Photo

Product Dimension

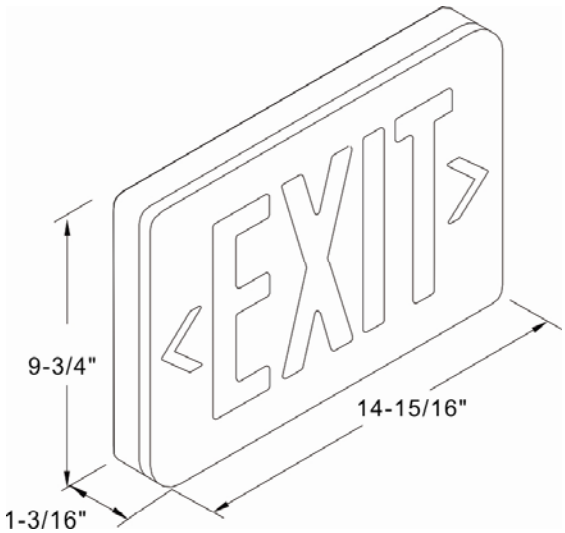

Product Feature

Housing

- Die-cast aluminum housing.
- Removable knockout chevron directional arrows.
- Red EXIT sign letter with 8 ” height and 1” stroke.
- Single and double face universal design.

Electrical

- AC 120/277V 60Hz dual voltage operation.
- Low energy consumption only 3.7 watts at 120V.
- Test switch and AC supply LED indicator.
- 3.6V long-life, maintenance-free, rechargeable Ni-Cad battery
- 24 hours recharge after 90 minutes discharge.
- Fully automatic, solid-state charger.
- Brown out circuit with overload and Short-Circuit protection.

Mounting

- Universal (wall, side or ceiling) mounting.

Warranty/Listing

- Warranty 3 years for fixture, warranty for battery 2 years , expect lifetime of battery 4 years.
- Suitable for use in 10℃-40℃ ambient temperature.
- Suitable for damp location
- Meets UL924,NFPA 101 life safety code, NEC, OSHA local and states codes..

Order Guide

Family	Function	EXIT Face	Lettering Color	Circuitry	Surface Treatment （EXIT Face）	Surface Treatment （Frame）
MED	**810:** AC only, no battery backup **800:** AC/DC, with battery backup	**S:** Single Exit Face **D:** Double Exit Face	**R:** Red Lettering	**CT:** Self Testing/Self Diagnostics **Blank:** Standard circuitry	**BA:** Brushed Aluminum **B:** Black Color Painted **W:** White Color Painted	**BA:** Brushed Aluminum **B:** Black Color Painted **W:** White Color Painted

Model list

NO.	Model	EXIT Face	Lettering Color	Circuit	Battery
1	MED-800SR	Single face	red color	Manual test	Ni-cad 2.4V600mA
2	MED-800DR	Double face	red color	Manual test	Ni-cad 2.4V600mA
3	MED-800SR-CT	Single face	red color	Self-Diagnostic	Ni-cad 4.8V600mA
4	MED-800DR-CT	Double face	red color	Self-Diagnostic	Ni-cad 4.8V600mA
5	MED-810SR	Single face	red color	AC only	-
6	MED-810DR	Double face	red color	AC only	-

Photometric

LUMINANCE MEASUREMENT TEST DATA

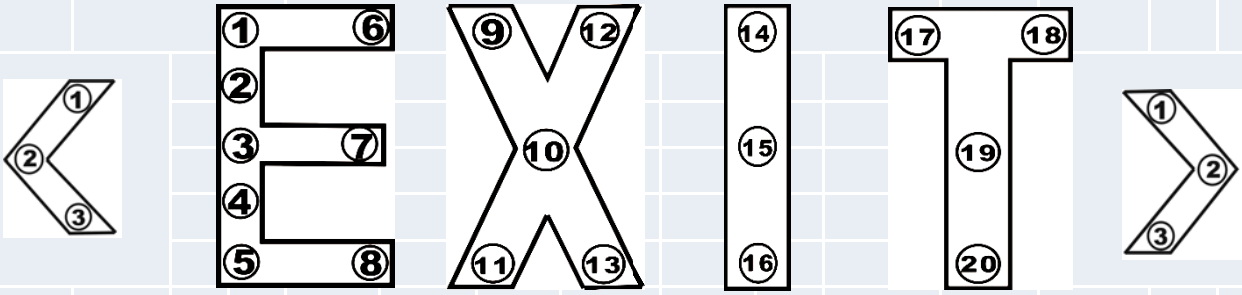

Measurement units in cd/m^2

	L1	14.81	1	28.15	9	29.47	14	26.95	17	28.84	R1	23.63
	L2	23.10	2	22.95	10	35.79	15	32.23	18	31.83	R2	19.23
	L3	15.94	3	30.56	11	105.00	16	102.00	19	31.84	R3	20.00
			4	52.86	12	29.76			20	102.50		
			5	119.00	13	108.70						
			6	28.13								
			7	32.66								
			8	120.60								
Average		17.95		54.36		61.74		53.73		48.75		20.95
Unifomity		1.560		5.25		3.69		3.78		3.55		1.23

1. Legend and chevron Average :	46.790				
2. Legend and Chevron uniformity :	8.143				
3. Minimum luminance of legend&chevron.	Legend:	22.95	Chevron:	14.81	
4. Maximum luminance of legend&chevron	Legend:	120.6	Chevron:	23.63	

Packaging

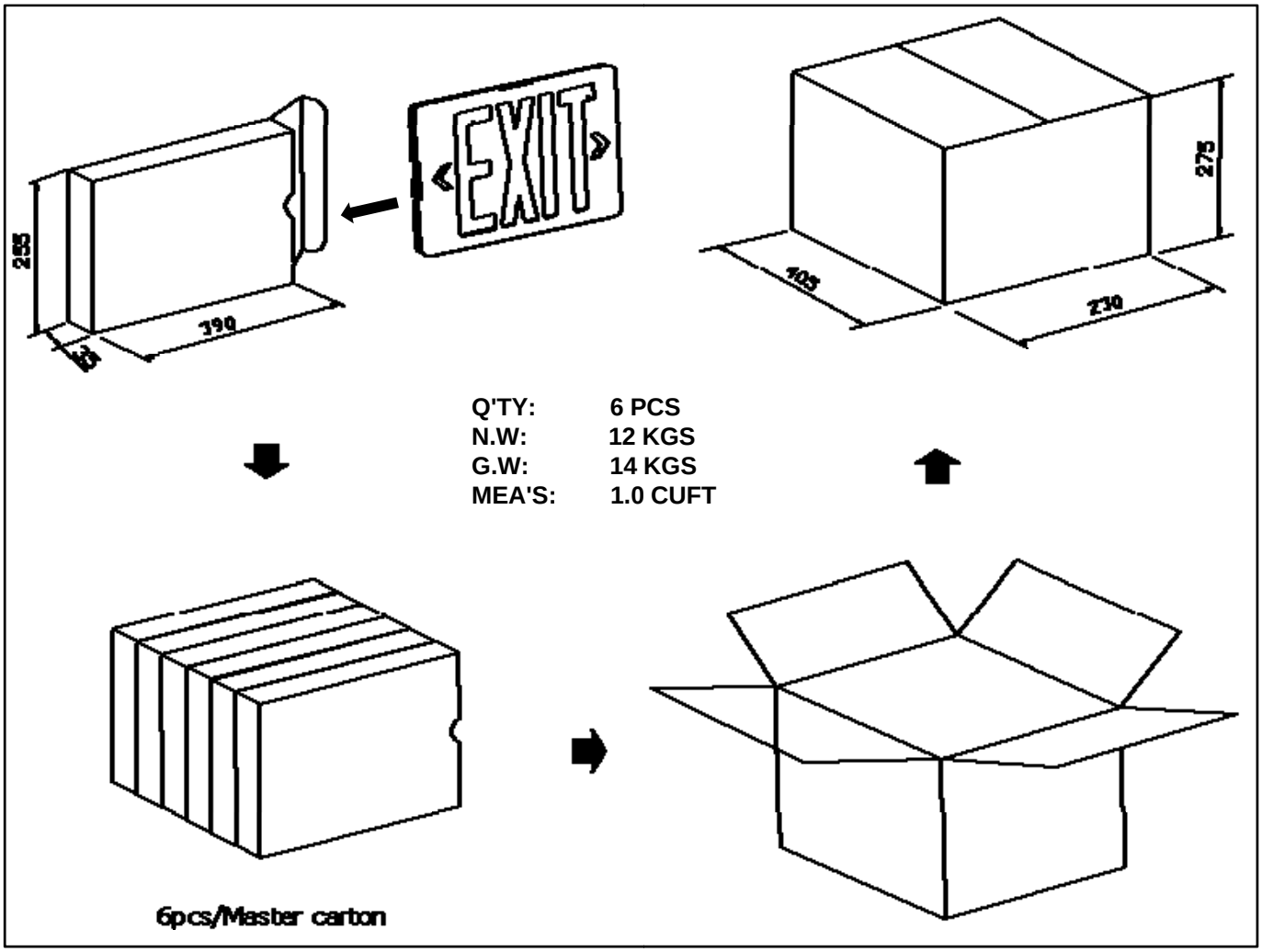
EXIT
255
390
65
275
105
230
Q'TY: 6 PCS
N.W: 12 KGS
G.W: 14 KGS
MEA'S: 1.0 CUFT
6pcs/Master carton